Easy Set Up Guide

Congratulations! With your new YuppTV POD, you have the power to watch the world... now.

YuppTV HD Internet TV Box (front)

YuppTV HD Internet TV Box (back)

Power (+12V) | Ethernet | HDMI | A/V Input | USB Input | USB Input

Package Contents:

YuppTV HD Internet TV Box

HDMI Cable

Please note: before using the remote, remove the film to activate the battery

YuppTV Remote with Battery
(AAA X 2)

Wireless USB Device

Power Cable

RCA Cable

Ethernet Cable

Step 1: Connecting the Audio and Video
(using the HDMI Cable *-or-* an RCA Cable)

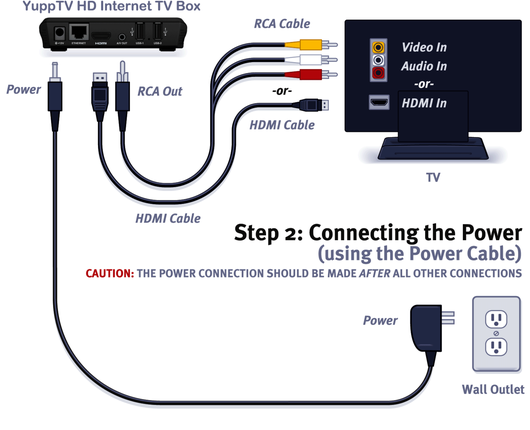

Step 2: Connecting the Power
(using the Power Cable)

CAUTION: THE POWER CONNECTION SHOULD BE MADE *AFTER* ALL OTHER CONNECTIONS

Step 3: Connecting to the Router
(using the Ethernet Cable or a Wireless USB Device)

Option A: Ethernet Cable Connection
(using the Ethernet Cable)

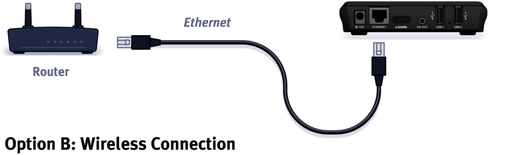

Option B: Wireless Connection

Please note: the Wireless USB Device may be inserted into either of the two USB ports available

Tip: to finish the wireless connection set up, select Settings, then Network from the YuppTV Menu